KIEN2032 Industrial Ethernet Switch
User's Manual

KYLAND Telecom Technology Co., Ltd.

KIEN2032 Industrial Ethernet Switch

User's Manual

Copyright © 2005 KYLAND Telecom Technology CO., LTD.

All rights reserved.

No part of this documentation may be excerpted, reproduced, translated, annotated or duplicated, in any form or by any means without the prior written permission of KYLAND Corporation.

Publisher: **KYLAND Telecom Technology CO., LTD**

Address: P.O.Box 100096, 085, Beijing, China

Website: http://www.kyland.cn

Postcode: 100096

Tel: （+86 10）82900770

Fax: （+86 10）82900780

E-mail：marketing @ kyland. com. cn

Version: V1, Dec. 2005

No.: e6t04050901

Preface

KIEN2032 is the high-performance network management Ethernet switch developed by KYLAND for industrial application. It is integrated optical communication equipment, which integrates with Ethernet access and serial data transmission. Its high-performance switching engine, firmness and closed case design, high-effective ribbed casing for heat removal without fan, over-current, over-voltage and EMC protection for power supply input terminal, excellent EMC protection performance for the Ethernet RJ45 port, RS232 and RS485 port enable the KIEN2032 to adapt the tough and dangerous industrial environment. The redundant function of the optical fiber network, independent network management channel for the whole network and powerful real time network management system for the whole network provide strongly guarantee for the reliable operation of the system.

The *KIEN2032 Industrial Ethernet Switch User's Manual* mainly introduces the technical principle, performance index, installation and commission of the KIEN2032 industrial Ethernet switch, and provides the reference for users to commence, expand and routine maintain the system. At the same time, it applies to the user training and learning for related technical personnel, so it is the practical teaching material for mass users to learn about the KIEN2032 industrial Ethernet switch.

This document mainly contains following contents:

Chapter1 Overview and System Features

Chapter2 Performance Index and Service Function

Chapter3 Hardware Architecture

Chapter4 Installation Procedure

Chapter5 Configuration and Application Method

Chapter6 Field Test Method

Chapter6 Networking Modes and System Configuration

Appendix A Twisted-pair and Pin Assignment Rules

Appendix B Type and Specification of Cable

Appendix C Abbreviation

This document is used together with the *Kyvision Industrial Ethernet Switch Dedicated Network Management User's Manual.*

Statement: For continuous update and perfection of the product and technology, the contents of this material may not be consistent with the actual product, please contact with us about related contents. If it is necessary for you to query the latest information on the product, please query our cooperation Website or contact with your local service representative directly.

Safety Notices

This product can provide excellent and reliable performance within its design scope. However, it needs to avoid the damage or destroy by human reasons.

- Read this Manual thoroughly and keep it well for future reference.
- Do not place the equipment next to the source of water and the damp place.
- Do not place anything on the power cable. Please place it somewhere that can not be reached.
- In order to avoid fire, do not tie or pack the cable.
- The connector of the power supply and other equipment connection should be connected firmly and regularly checked.

Under following conditions, please power off and contact with our company immediately.

1. Water into equipment;
2. Equipment is broken or the crust is cracked.
3. The equipment works abnormally or the performance provided has changed completely.
4. The equipment gives off odor, smoke or noise.

- Pay attention to the cleanness of the fiber socket and jack. When the equipment operates, do not watch the end-face of the fiber directly.
- Pay attention to the cleanness of the equipment and clean it with soft cotton cloth if necessary.
- Do not repair the equipment by yourself unless it is definitely indicated in this manual.

Description of Warning Mark:

This manual uses two kinds of obvious warning marks to prompt users that more attention should be paid during operation. The meanings of these marks as follows:

Warning: The comment after this mark should be paid more attention, the incorrect operation will cause the switch to be damaged seriously or it will cause body injury for the operator.

Caution, Note, Warning and Dangerous: Prompt where more attention should be paid.

Contents

Chapter1 System Overview **1**

1.1 Product Overview 1

1.2 Features 2

1.3 Packing List and Unpacking Check 3

Chapter2 Performance Index **5**

2.1 System Index 5

2.2Service interface 6

2.3 Service Functions 7

Chapter3 Hardware Structure **9**

3.1 System structure 9

3.2 Switch Structure 10

3.2.1 Case 10

3.2.2 Front Panel 11

3.2.3 Top Panel 15

3.2.4 Bottom Panel 18

Chapter 4 Hardware Installation **21**

4.1 Installation Requirement 21

4.2 Installation of Main Machine 21

4.2.1 Rail Installation 21

4.2.2 Wall-mounted Installation 23

4.3 Cable Connection 27

4.4 Optical Fiber Connection 27

4.5 Cable Layout 29

Chapter 5 Configuration and Application of Data Port **31**

5.1 Configuration of Data Port 31

5.1.1 Logon Console Network Management 31

5.1.2 Console Network Management 33

5.1.3 WEB Network Management....41
5.2 Application of Data Ports....44
5.2.1 As TCP Server....44
5.2.2 As TCP Client....45
5.2.3 UDP Method....45
Chapter 6 Testing Methods....47
6.1 Self Testing....47
6.2 Testing of Ethernet Ports....47
6.3 Testing of Fiber Ports....48
6.4 Data Ports Test....49
Chapter 7 Networking Modes and System Configuration....51
7.1 Networking Modes....51
7.2 System Configuration....52
Appendix A Twisted-pair and Pin Distribution....55
Appendix B Type and Specification of Cable....57
Appendix C Glossary....59

Chapter1 System Overview

1.1 Product Overview

KIEN2032 is the high-performance network management Ethernet switch developed by KYLAND for industrial application. It is the integrated optical communication equipment which integrates with Ethernet access and serial data transmission. Its high-performance switching engine, firmness and closed case design, high-effective ribbed casing for heat removal without fan, over-current, over-voltage and EMC protection for power supply input terminal, excellent EMC protection performance for the Ethernet RJ45 port, RS232 and RS485 port enable the KIEN2032 to adapt the tough and dangerous industrial environment. The redundant function of the optical fiber network, independent network management channel for the whole network and powerful real time network management system for the whole network And it can strongly guarantee the reliable operation of the system.

The KIEN2032 industrial Ethernet switch can provide two installation methods such as DIN rail and wall-mounted. The front panel presents two pair of 100Base-FX single mode or multi-mode optical fiber interface with uplink redundancy. It can take advantage of the uplink redundant optical fiber interface to form the optical fiber redundant ring network, so the recovery time for the ring network redundancy is less than 300ms when the system failure occurs. There are three 10Base-T/100Base-TX Ethernet RJ45 ports. Each RJ45 port can provide the adaptive function and can be configured to 10Base-T or 100Base-TX status automatically and the full duplex and half duplex operation mode. Furthermore, it can connect MDI/MDI-X automatically. 2 channel of RS232 and 2 channels of RS485 data interface which can implement the point to point and point to multi-point communication on the network, to implement the remote online of the serial port equipment readily.

1.2 Features

High-performance Industrial Ethernet Switch

1. 10/100Base-T/TX Ethernet ports, auto-sensing, full/half duplex, Auto MDI/MDI-X connection
2. 100Base-FX fiber ports, single mode/multimode, full duplex
3. High-speed redundant optical fiber ring (recovery time < 300ms)
4. VLAN to take control of broadcast domain and segment flow
5. Broadcast storm control

Powerful Management Function

1. Integral management platform for the entire network based on RS232 standard. The management system is immune against the attack of virus or hacker since the management channel is independent to service channel.
2. Special-designed management software for upper PC realizes the auto-configuration of IP address for networking devices and auto-scan/spanning of network topology.
3. Individual naming for each devices in the network.
4. Setting and query for VLAN.
5. Setting and query for alarm of power and ports.
6. Setting and query for port working mode, prioritization, and rate

Industrial Power

1. Industrial power input of DC24V（DC18V～36V）.
2. Reliable protection for EMC and against over-current/over-voltage.

Multiple Serial Data Transmission

1. 2 x RS232, 2 x RS485 or 1 x RS232 and 1 x RS485.
2. Supports TCP and UDP and distribute the data from IP level according to TCP and UDP user-targeted ports.
3. Open SOCKET mode for store data.
4. Point-to-point or multipoint-to-multipoint.

Industrial Design

1. Solid IP40 housing
2. Operation at -35℃ to +75℃
3. Air humidity 10% to 95%
4. Easy DIN-Rail mounting

1.3 Packing List and Unpacking Check

1. Packing List

The packing box contains following contents:

KIEN2032	1
3-pin DC Power Supply Terminal	1
8-pin Data Interface Terminal	1
KIEN2032 Industrial Ethernet Switch User's Manual	1
Kyvision Industrial Ethernet Switch Dedicated Network Management User's accompanying with 1 software CD	1
Customer Service Manual	1
Φ3 Grounding Cool Terminal, M3*8 Grounding Screw	1 set

2. Unpacking Check

Place the box smoothly before it is opened and note direction of the packing box and ensure its face upward to prevent dropping of the switch after unpacking. Avoid the KIEN2032 drops after the box is opened. If the hard material is used to open this box, the hard material should not enter the case body too much to prevent the internal equipment damaged.

Check the quantity of KIEN2032 according to the packaging check list (including the KIEN2032 host, the equipment parts, user's manual and customer service manual) and check the appearance quality of KIEN2032.

Warning:

The equipment is built in precision device, please note to gentile take and place it to avoid drastic vibration which will have an effect on the performance of the equipment.

Chapter2 Performance Index

2.1 System Index

The system performance index of the KIEN2032 industrial Ethernet switch is shown as table 2-1.

Table2-1 System Index

System Index	KIEN2032
Quantity of RJ45 port	3 ×10Base-T/100Base-TX
Quantity of uplink redundant fiber port	2 100Base-FX-SM/MM
Number of serial data interfaces	2 RS232s, 1 RS485 or 1 RS232 and 2 RS485s
System parameters	Support standard: IEEE802.3, IEEE 802.3x, IEEE 802.3u, IEEE 802.1p and IEEE 802.1Q Storage and forward rate: 148810 pps Maximum filtering rate: 148810 pps MAC address table: 4K Switch method: storage and forward System switching bandwidth: 4.8G Maximum number of VLANs: 16 EMC interference: EN55022 EMC immunity: EN50082-2
Ethernet port	Physical interface: RJ-45 with shield RJ-45 port: 10Base -T/100Base-TX can support the self-negotiation function. Interface standard: Comply with IEEE802.3 standard. Transmission distance: less than 100m
Data port	Physical interface: 3.81 phoenix wiring terminal BER for data transmission: $\leq 10^{-10}$ Asynchronous rate: 0~115.2Kbps (adaptive) Support both TCP/IP and UDP/IP protocol RS-485 interface: Can connect to 32-128 nodes with communication distance 120m. Electrical characteristics: comply with 3-wire RS232- and 2-wire RS485-related standard.
Fiber port	Light Transmission Power: >-13dbm(SM) >-20dbm(MM) Light Receiving Sensitivity: <-28dbm(SM) <-35dbm(MM) Wavelength: 1310nm(SM) 1550nm(SM) 1310 nm(MM)

	Transmission distance: 20 ~ 80Km(SM) <2Km(MM) Connector type: SC/FC Transmission rate: 125Mbps
CONSOLE interface	Physical interface: RJ-45 with shield Interface standard: Comply with IEEE802.3 standard (3-wire). Interface rate: 19200bps
Power supply	Input voltage: DC24V (DC 18V ~ 36V) Input power consumption: <6W Over-current protection: Built-in
Mechanical parameters	Physical dimension (H * W * D): 142 ㎜55.4 ㎜120.5 ㎜ (don't include DIN rail and wall-mounted assemble dimension) Installation method: DIN rail and wall-mounted method Heat removal method: Ribbed aluminum casing heat dissipation without fan. Outgoing wire method: Service\power supply lead from front and the network management lead from upper. Crust protection: IP40 Weight: 1kg
Ambient conditions	Operation temperature: -35□ ~ 75□ Storage temperature: -45□ ~ 85□ Humidity: 10% ~ 95% (non-condensing)

2.2Service interface

1. Three 10Base-T/100Base-TX Ethernet RJ4 ports, each of which presents the adaptive function. Can be adaptive of 10/100M and operate in half duplex/full duplex mode automatically, and support MDI/MDI-X auto-connection. The transmission distance is less than 100m.
2. 2 pair of 100Base-FX single-mode or multi-mode fiber ports, each of which provides the throughput up to 100Mbps and is forced to be in the 100M full duplex working mode. Support optical route redundant technology and the redundant recovery time is less than 300ms.
3. Comply with the IEEE802.3/802.3U/802.3X.
4. The meaning of RJ45 ports is: Yellow light – Indication for port rate.ON: 100M,;OFF: 10M. Green Light – Indication for connection status: ON: effective connection network; BLINKING: network active; OFF: connectionless.
5. 2 0~115.2Kbps adaptive serial data with two types of interfaces such as RS232 and RS485.

2.3 Service Functions

Connection of Serial Data

In KIEN2032, a serial port server is embedded to make serial data into Ethernet packets and realize Ethernet switching and transmitting for serial data.

Independent Management of Serial Port Server

The embedded serial port server of KIEN2032 owns its independent IP address, and the relevant parameters of server and its ports can be managed, queried, and set through remote Telnet, WEB and serial port mode.

100Mbit/s Optical Fiber Redundancy

It is critical for network to re-configure immediately once disconnection occurs in the industrial fields. Accordingly, KIEN2032 comes with DT-Ring, which is developed by KYLAND, and offers 2 redundant fiber ports to realize the redundant ring network. The system will be able to re-configure within 300ms after cable fault.

Configuration and Management

At KIEN2032, the settings, queries and management can be realized for the whole switch or network system through CONSOLE interface.

LED Indicating

The LEDs indicate the port status correctly including transmission rate, link status and system status.

VLAN

The network can be divided into several VLANs according to ports, through which the users in one VLAN can communicate each other. The VLAN of KIEN2032 conforms to IEEE802.1Q and can realize the communication within one VLAN of different switches. KIEN2032 supports up to sixteen VLANs based on IEEE802.1Q.

802.1p Prioritization

KIEN2032 conforms to 802.1p, which is used the most widely in LAN environment. The end-users of KIEN2032 can make use of this function to configure the port-based prioritization when 802.1p is not supported at user's end and different priority is necessary for different ports' services. Only the data package without Prioritization in the Packet in the ports can be affected by this function. Each port of KIEN2032 supports 2 levels (high,

low) prioritization.

Layer-2 Switching

Switches work in two ways: Cut-Through and Store-and-Forward. In Cut-Through, a data packet is immediately relayed further after detecting the target address; in Store-and-Forward, a data packet is first read-in completely and checked for errors before the switch relays the same. KIEN2032 employs Store-and-Forward that is a switching mode widely used.

Broadcast Storm Control

Broadcast storm is the ceaseless transfer of broadcast frame or multicast frame in bridge, which is caused by loop and will waste much bandwidth. The purpose of broadcast storm control is to optimize the performance of switch network. KIEN2032 supports the broadcast storm based on percentage. With the control percentage, the broadcast flow of KIEN2032 will be monitored and controlled effectively. The switch will filter out the over flow and ensure the flow percentage is normal once the bandwidth of broadcast flow exceed the limit.

Alarming Function

KIEN2032 offers the alarming functions for port link and network. Through management software, all the alarming functions can be configured functionally. The alarming information is shown on management interface.

Setting for Working Mode of Port

KIEN2032 is able to set the working mode of all ports through management: full/half duplex, auto-sensing, enforced full/half duplex, enforced 10M/100M etc.

Setting for Port Rate

KIEN2032 is able to set the rate of all ports through management as any integer multiple of 32kbps.

Chapter3 Hardware Structu re

3.1 System structure

The hardware architecture of the KIEN2032 industrial Ethernet switch is shown as Figure .3-1.

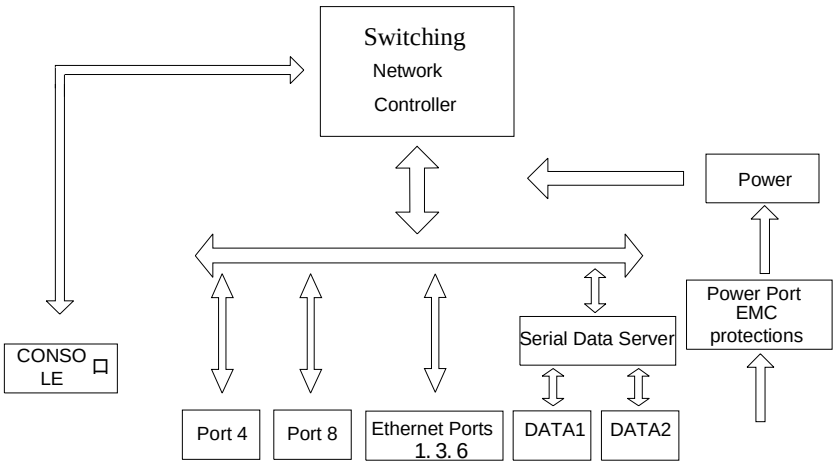

Figure .3-1 Hardware Structure

The system hardware mainly consists of following parts:

1 . The switching network controller adopts the high performance ASIC chip technology to provide the layer2 line rate forward for the data packet.

2 . The serial data server adopts the high performance ASIC chip technology to provide the conversion of TCP/IP protocol packet for the serial data.

3 . Two channels of data can provide the RS232 and RS485 interface.

4 . The optical fiber interface adopts the optical receiving and transmitting integrated module to provide stable performance.

5 . The power supply adopts the industrial-level one which can provide the over-current, over-voltage and EMC protection.

6 . All Ethernet interfaces, data interfaces and CONSOLE interfaces can provide the EMC protection.

3.2 Switch Structure

3.2.1 Case

The case of the KIEN2032 is a compact wall-mounted or DIN rail structure. The whole equipment adopts the hexahedral full closed structure with the protection level up to IP40. The left and right side ribbed plate of the case is made of aluminum and is a part of the whole equipment head dissipation system. The ribbed structure can increase the heat dissipation area double. The heat produced by the whole equipment can be removed to the environment effectively by taking advantages of the ribbed caing in the radiation and convection way, by which to greatly improve the high temperature-resistance performance of the equipment. It spurns the traditional fan for heating removal, and reduces the power consumption of the whole equipment as well as improves the stability of the system. The profile of the case for the KIEN2032 is shown as Figure .3-2.

Its external dimension (do not include the dimension of the DIN rail and the wall-mounted assembly) is 142 ㎜ x 55.4 ㎜ x 120.5 ㎜ (H x W x D).

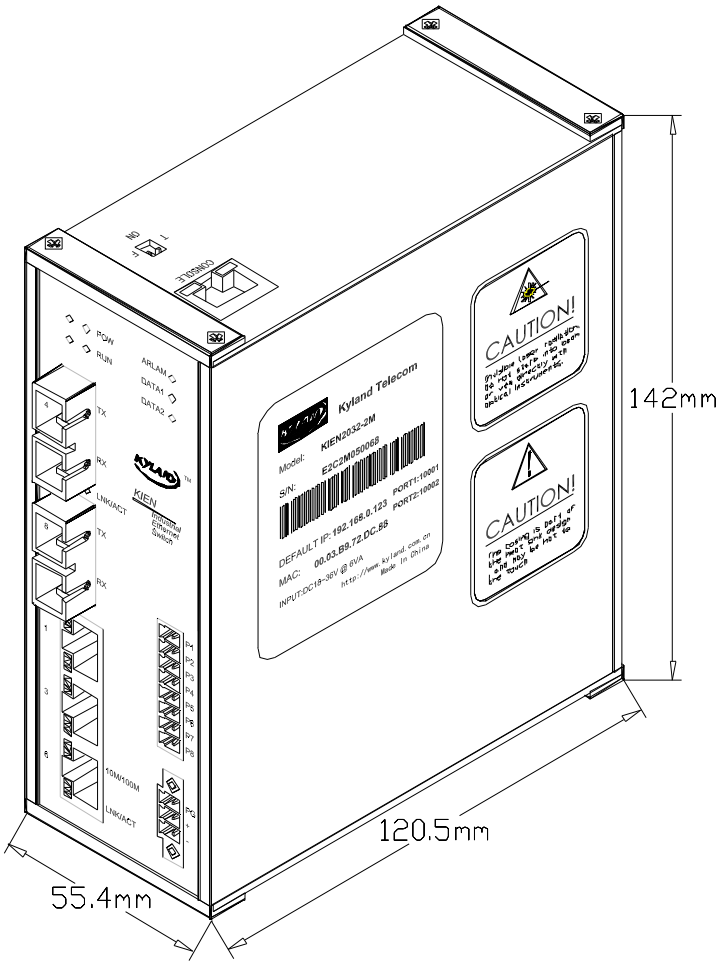

Figure .3-2 Outline drawing of KIEN2032

Warning:

The shell of this switch is a part of the whole equipment heat dissipation system. It will get hot because of heat dissipation when the equipment works normally, do not touch the crust when the equipment works to prevent from scalding.

3.2.2 Front Panel

The front panel of the KIEN2032 industrial Ethernet switch integrates with 2 pairs of optical fiber interfaces, 3 10Base-T/100Base-TX Ethernet RJ45 ports, 1 power supply input terminal, 1 data interface terminal and 9 system and port operation indication lights as shown as Figure .3-3.

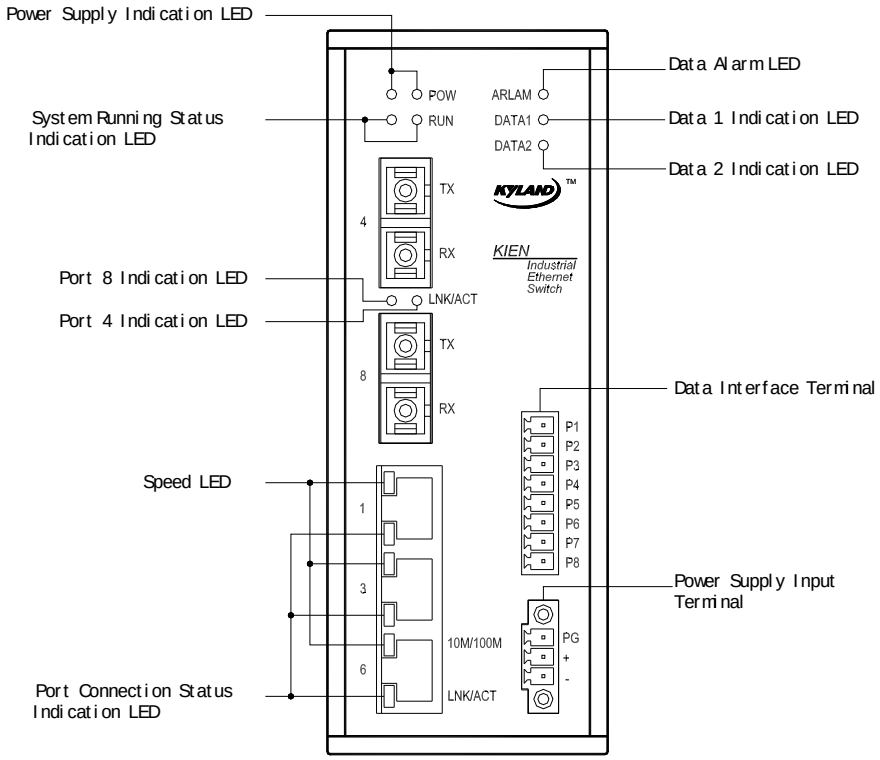

Figure .3-3 Front Panel Diagram

Optical Fiber Interface

The KIEN2032 presents 2 pairs of 100Base-FX full duplex single mode or multi-mode optical fiber interface with uplink redundancy; the port number is 4 and 8. The connector can select the SC or FC. The optical fiber interface should be used in pair (TX and RX in pair), where, the TX interface is the optical transmitting terminal which connects to the optical receiving terminal RX for the optical interface of the remote switching, the RX is the optical receiving terminal which connects to the optical transmitting terminal TX for the same optical interface of the remote switch. It can take advantages of 2 pairs of 100Base-FX optical fibers interfaces to form the optical fiber redundant ring network. The ring network redundant recovery time is less than 300ms to improve the reliability of the network operation effectively when the system failure occurs.

Ethernet RJ45 Port

The KIEN2032 presents three 10Base-T/100Base-TX Ethernet RJ45 ports. The port number is 1, 3 and 6, each of RJ45 ports can present the adaptive function and support the automatic MDI/MDI-X connection. The direct connected network cable/cross-connected network cable can be used to connect the switch with the end equipment, server, hub and other switches. Each port supports the IEEE802.3x adaptive function, so the optimal transmission method (half duplex or full duplex) and data rate (10 Mbps or 100Mbps) can be selected automatically (connected equipment must also support this features). If the equipment connected with these ports does not support the adaptation, the port will send correct rate, but the transmission mode is half duplex by default.

Power Input Terminal

The KIEN2032 uses the DC24V power supply. It uses the 3.81 mm gap 3-wire phoenix terminal to connect to the power supply. The diameter of the power supply is less than 1.5 mm.

The sequence of the connection is shown as Figure .3-5. The connection wire and the installation step as follows:

1. Peel off the crust of the power cable for about 5mm to twist several of exposed copper wires into one bundle;
2. Use the 2.5mm "-" shape screw driver to loose the "power cable lock screw, insert the power cable into the hole at the end of the terminal, screw tightly the "power cable lock screw";
3. Insert the power supply terminal into the DC socket of the equipment, use the 2.5mm "-" shape screw driver to screw tightly two "terminal lock screw" to fixedly connect the terminal and the power supply connector.

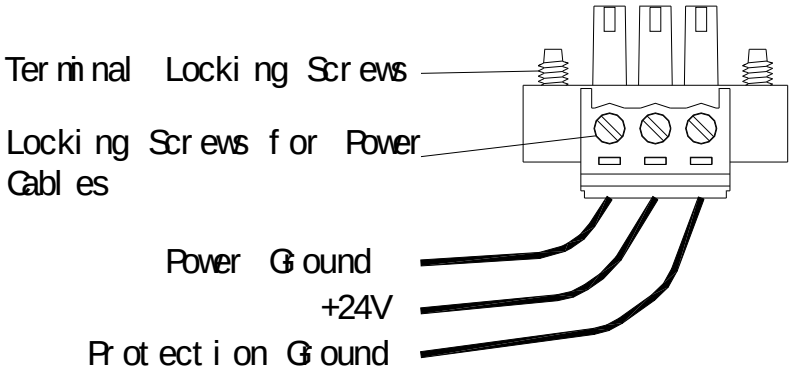

Figure .3-4 Connection Diagram of DC Power Supply Terminal

Data Interface

The KIEN2032 presents 2 serial data, the factory default port number for the first data is 10001, whose interface method may be RS232 or RS485 (Configured according to the requirement of users). The factory default port number for the second data is 10002, whose interface method is coexist for RS232 and RS485. The connection wire terminal for the data interface is the 3.81 mm gap of 8-wire phoenix terminals, whose connection method is the same as that of the power supply terminal. The sequence of the connection is shown as Figure .3-5.

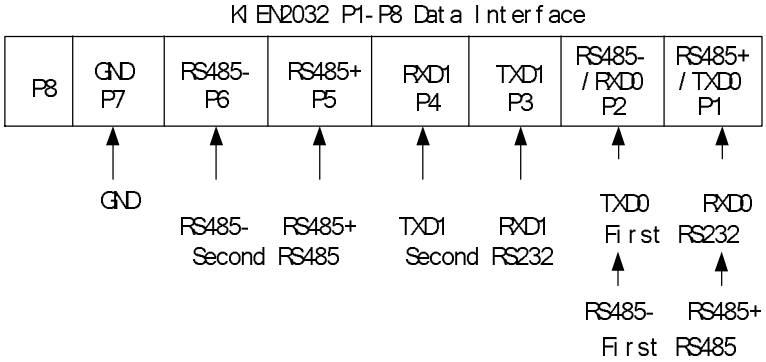

Figure .3-5 Connection Wire Diagram of KIEN2032 Data Interface

LED Indicator

The LED indication light of the KIEN2032 front panel can display the status of the system operation and the port, which facilitates to find problem and troubleshooting. Table 3-1 describes the meanings of the front panel LED indication light.

Table 3-1 Description of LED Indication Light

LED	Condition	Status
System Status LED		
RUN	ON	The optical fiber interface of the switch is set to the redundant mode, the equipment is central office device.
	Blinking	The optical fiber interface of the switch is set to the redundant mode, the equipment is set as remote.

	OFF	The optical fiber interface of the switch is set to common direct connection mode.
POWER	ON	The power supply connects and operates normally.
	OFF	The power supply is not connected or operates abnormally.
Data Indication Light		
ARLAM	OFF	Operate normally.
	Blink	Being actuating and setting incorrectly or the data circuit fails.
DATA1	ON	Without Data transmission
	Blink	With Data transmission
DATA2	ON	Without Data transmission
	Blink	With Data transmission
Optical Interface Status LED (Optical interface 4 and 8)		
LINK/ACT	ON	The port has set up an effective network connection.
	Blink	The port has network activity.
	OFF	The port has not set up any effective network connection.
Ethernet RJ45 Port Status LED		
Each Ethernet RJ45 port has two indication lights, the yellow light is the port rate indication light, while the green one is the port connection status indication light.		
10M/100M (Yellow light)	Light up	100M operating status (namely 100Base-TX)
	Extinguish	100M operating status (namely 10Base-T)
LINK/ACT (Green light)	Light up	The port has set up an effective network connection.
	Flash	The port has network activity.
	Extinguish	The port has not set up any effective network connection.

3.2.3 Top Panel

The front panel of the KIEN2032 industrial Ethernet switch integrates with the network management interface and the property setting switching as shown as Figure .3-6.

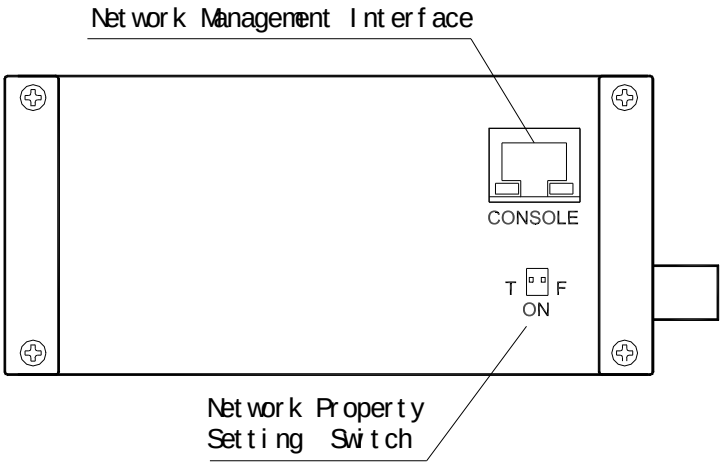

Figure .3-6 Top Panel Structure

Network Management Interface (CONSOLE)

The network management interface of the KIEN2032 is the shielded RJ45 socket with shield, the interface communication standard is the 3-wire RS232. Users can use the network management wire whose one terminal is RJ45 and the other terminal is DB9F to connect the network management interface of the KIEN2032 with the 9-pin serial port of the control computer. Run the local management software (LocalAdmin) provided by KYLAND on the control computer, and configure, query and manage the KIEN2032 which connects with the serial port of the control computer directly. Connect the network management wire and the central office equipment and run the network management software (Kyvision) provided by KYLAND on the control computer, to implement the configuration, query and management function for all KIEN2032 equipment in the whole network. (For the use of the network management software and local management software, refer to *Kyvision Industrial Ethernet Switch Dedicated Network Management User's Manual*. This network management interface and network management software can not implement the management of the serial data interface. For the management of the data interface, refer to the contents of chapter 5 in this manual.

The sequence of the connection for the KIEN2032 network management interface with the 9-pin serial port of the PC is shown as Figure .3-7.

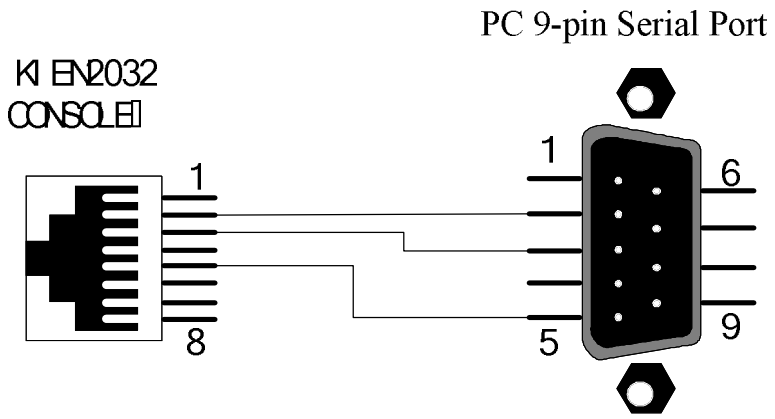

Figure .3-7 Connection Diagram of KIEN2032 Network Management Wire

Property Setting Switch

There is two bit of property setting switch for the KIEN2032, which are defined as T and F respectively. T is used to set the redundancy mode and common direct connection mode for 2 pair of optical interfaces. When T is switched to ON, 2 pair of optical interfaces are set to common direct connection mode. Otherwise, it will be the redundant mode. F is used to set the office and remote property of the equipment when the optical fiber interface is the redundant mode. If the T is switched to OFF, the equipment is the office terminal when the T is switched to ON. Otherwise, it will be the remote terminal. The corresponding relationship for the concrete position and the property setting switch is shown as table3-2.

Table 3-2 Corresponding Relationship Table for Position and Property Setting Switch

Setting Switch Position			**Meanings of Property**
Position Schematics	**Logical Position**		
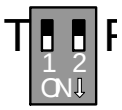	T	OFF	The optical fiber interface is the redundancy mode, and the equipment is set as remote terminal.
	F	OFF	
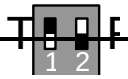	T	OFF	The optical fiber interface is

	F	ON	the redundancy mode, and the equipment is set as office terminal.
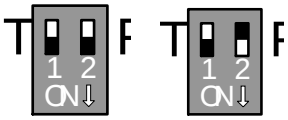	T	ON	The optical fiber is in common direct connection mode.
	F	ON/OFF	

Note:

Only one terminal equipment can be set to the office terminal within the optical fiber redundant ring network, other are remote terminal.

3.2.4 Bottom Panel

The bottom panel of the KIEN2032 presents a grounding screw hole, accompanying with M3 * 8 grounding screw and Φ3 grounding cool pressure terminal. As is shown in Figure .3-8, after one terminal of the grounding wire is presses to the cool press terminal, the grounding screw is used to fix the grounding hole of the crust. Another terminal of the grounding wire is grounded reliably. The diameter of the grounding wire is less than 2 ㎜.

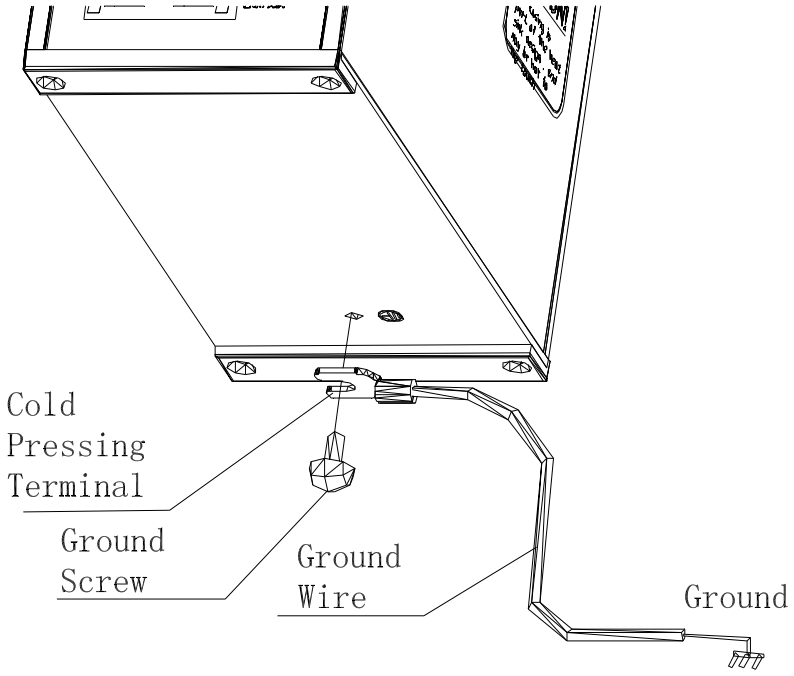

Figure .3-8 Grounding Method of KIEN2032 Crust

Chapter 4 Hardware Installation

4.1 Installation Requirement

The KIEN2032 industrial Ethernet switch single-body structure and can be directly locked on the standard 35mm DIN rail or is mounted on vertical walls or internal walls of the switch cabinet with the wall mounting part.

Before the KIEN2032 is installed, confirm whether the operation environment is applicable firstly, including power supply demand, full space, whether it approaches other equipment to be connected to the network equipment and whether other equipment is in place. Please confirm following installation requirement:

1. Power Supply Requirement: The KIEN2032 standard product uses redundant DC 24V power supply (18VDC ~ 36VDC).
2. Environment Requirement: Temperature -35□ ~ 75□, relative humidity (non-condensation)
3. Grounding Resistance Requirement: <5Ω
4. According to the configuration requirement of the contract, check whether the cables are laid out in place and whether the connector is right.
5. Prevent direct sunshine irradiation and keep away from the heating source or the area with strong EMC interference.
6. The KIEN2032 standard product only provides the DIN rail installation assembly, so users only need to prepare the DIN rail. If the wall-mounted installation is required, it is necessary to purchase the wall-mounted installation assembly. Furthermore, users also need to prepare the screw, cap and tools for wall-mounted installation, to ensure the reliable installation.
7. Check whether there is the cable or connector needed to install.

4.2 Installation of Main Machine

4.2.1 Rail Installation

For most of the industrial application, it is convenient to install the 35 ㎜ standard DIN rail. When you take out of the packaging box, the rear panel of the KIEN2032 should

have fixed green plastic DIN rail connection socket. The dimension of the rail installation is shown as Figure .4-1. If the KIEN2032 needs to be installed to the DIN rail, should check the installation condition of the DIN rail before it is installed. To check the following::

1 . Whether the DIN rail is fixed and firmly, whether the DIN rail is installed with other equipments and whether there is enough space to install the KIEN2032.

2 . Whether there is proper power supply connected in the rail.

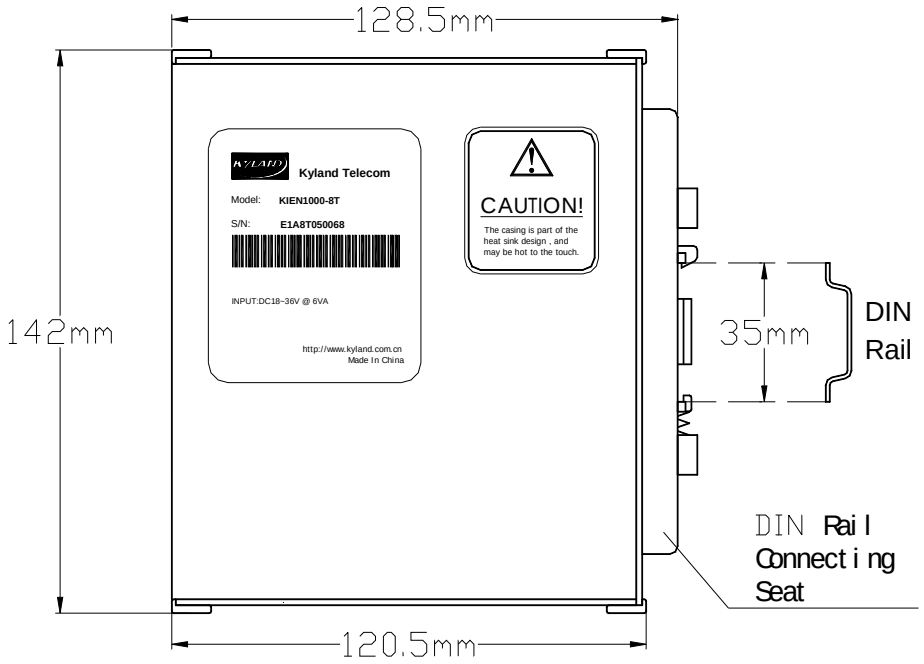

Figure .4-1 Dimension Diagram of KIEN2032 Rail Installation

After the installation position of the KIEN2032 is selected, following step is complied with to install the KIEN2032 to the DIN rail:

1. Insert the lower part of the DIN rail into the fixed rail with spring support under the lower part of the DIN rail connection socket. Exert force slight on the bottom panel of the KIEN2032 and turn the equipment as Figure .4-2.

2. As is shown in Figure .4-2, insert the DIN rail into the DIN rail connection socket, confirm that the KIEN2032 equipment is installed to the DIN rail reliably.

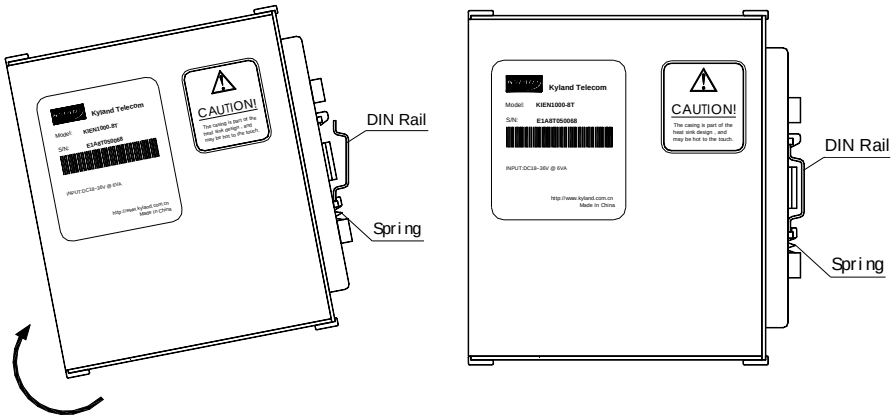

a b

Figure .4-2 Install KIEN2032 to DIN Rail

4.2.2 Wall-mounted Installation

For some application occasion, it is not convenient to install the DIN rail, so it is more applicable to use the wall-mounted installation. KYLAND can provide users with the wall-mounted plate which is the assembly used to the wall-mounted installation for the KIEN2032. The dimension of the wall-mounted installation is shown as Figure .4-3.

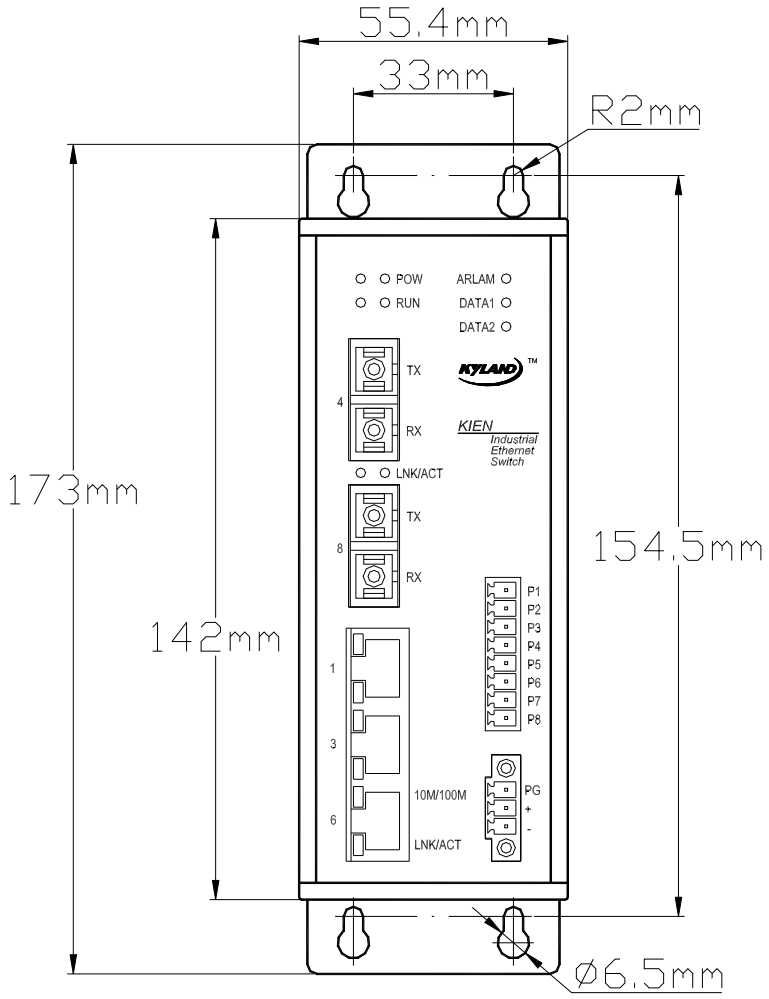

Figure .4-3 Dimension Diagram of KIEN2032 Wall-mounted Installation

Note:

The wall-mounted plate is not the standard configuration of the KIEN2032. If it is necessary for our company to provide this configure, please order it individually when you purchase.

The installation steps of the KIEN2032 wall-mounted installation as follows:

1 . Use the "+" screw driver to loose the two screws which is used to fix the DIN rail connection socket on the KIEN2032 equipment firstly, disassemble the green

DIN rail connection socket.

2 . Take out the wall-mounted plate and the wall-mounted plate screw from the packaging ("+" rail screw M3 * 6). Use the "+" screw driver to install the wall-mounted plate to the position where the DIN rail connection socket was installed. The installation direction of the wall-mounted plate is shown as Figure .4-4.

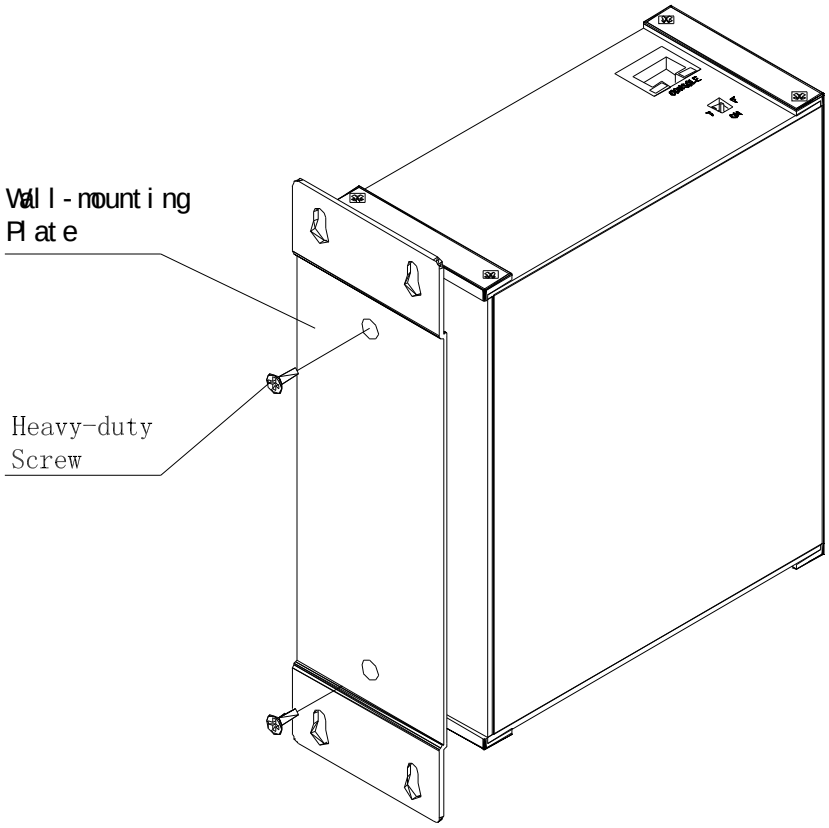

Figure .4-4 Installation of Wall-mounted Plate

3 . Selection of Installation Position: Vertical wall or inner wall of the case. If it is selected to install to the wall vertically, it is suggested to use the Φ6 plastic expansibility blot and Φ3 self-contained screw to install the equipment. According to the installation dimension of the annotation in Figure .4-3, the impulse electric drill is used to punch 4 Φ6 holes in wall, whose depth should be able to contain the Φ6 plastic expansibility blot. After the plastic expansibility blot is plugged into the hole, use the "+" screw driver to screw the self-contained screw into the plastic expansibility blot, but don't screw it tightly and remain

about 5mm distance. If it needs to install to the inner wall of the case, it is suggested to drill 4 M2 screw holes in the inner wall of case according to the installation dimension when the case is made, or use the electric drill to punch 4 Φ4 holes on scene by hand. Use the "+" screw driver to install the "+" rail screw of 4 M3 * 10 to the 4 holes. If there is no screw in the hole, it is necessary to install 4 M3 screw at the back. Finally, the screw should not be screwed tightly and retain about 5mm distance.

4 . After fixing the screw to the wall, install the KIEN2032 to selected position to enable 4 screws to pass through 4 Φ6.5 holes of the wall-mounted plate. Slip down the KIEN2032. It is shown as Figure .4-5. Screw tightly 4 screws. The KIEN2032 is fixedly installed to the wall or the inner wall of case.

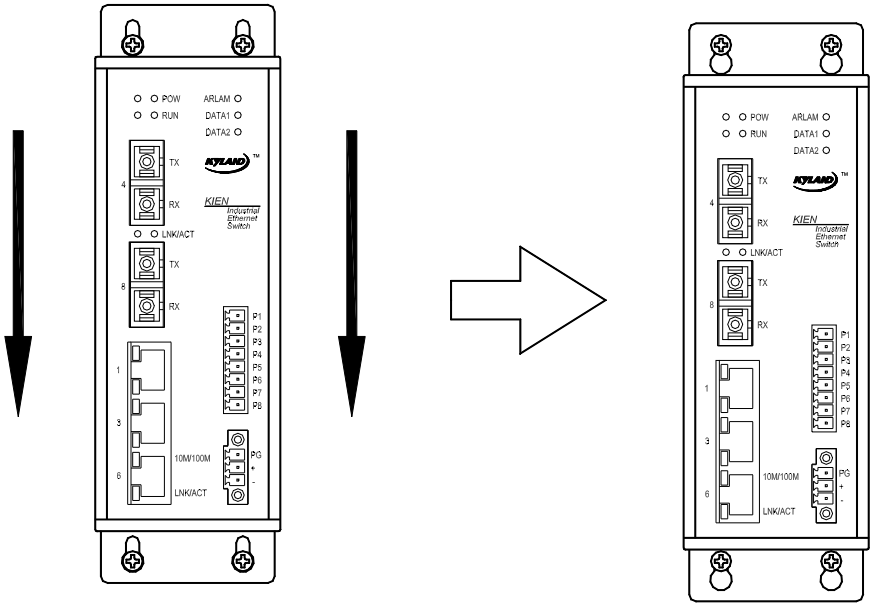

Figure .4-5 Schematics of Wall-mounted Installation Process

4.3 Cable Connection

After the KIEN2032 is installed correctly, the installation connection of cable can be implemented. The cable connection of following interface is mainly contained.

1 . Service Interface

The terminal equipment interface provided by KIEN2032 is

10Base-T/100Base-TX Ethernet RJ45 interface, which is connected straight-through to the end devices and cross-over to the networking devices.

2 . Connect Network Management Interface

The KIEN2032 connects with the serial port of the control computer by the CONSOLE interface of top panel, so users can make a network management wire with suitable length according to Figure .3-7.

3 . Connect Serial Port

Select the RS232 or RS485 interface according to the type of the serial port and it can connect up to 2 channels of data.

4 . Connect Power Supply

The KIEN2032 equipment uses the DC 24V power supply according to the indication of the product label. After connecting all other cable, the power supply can be connected.

4.4 Optical Fiber Connection

The KIEN2032 provides 2 pairs of redundant 100Base-FX full duplex single mode or multi-mode optical fiber interface. These optical fiber interfaces can be used to establish the optical fiber redundant ring network. When the failure for some equipment of the optical cable within the network occurs, the network will recover within 300ms. The SC or FC can be selected as the connector of the optical fiber interface according to the requirement.

Warning:

This switch uses the laser to transmit the signal on the fiber cable. The laser complies with the level 1 requirement of the laser product, the general operation does not harm to your eyes. However, when it powers on, do not watch the optical transmission port and the end face of the optical fiber terminator by naked eye.

The step for connecting the inserted optical fiber module as follows:

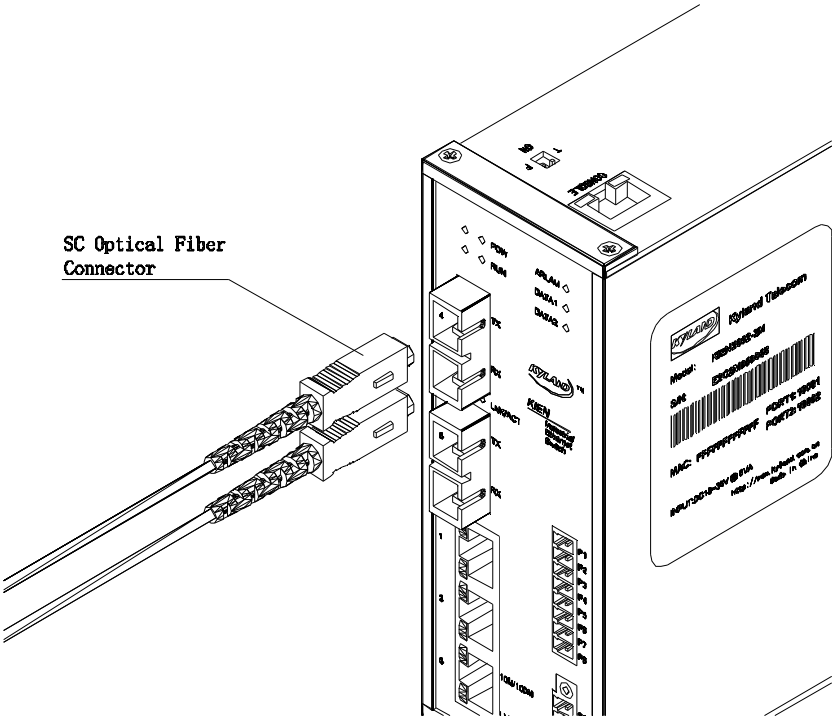

Figure .4-6 Connection of Optical Fiber Port

1 . Remove and keep the rubber cover of the SC or FC port. When it is not used, use the rubber cover to protect the optical fiber terminator.

2 . Check whether the optical fiber terminator is clean. Dip into the clean paper towel or tampon, wipe off the cable connector gently. The dirt optical fiber terminator will reduce the quality of the optical transmission, which will have an effect on the performance of the port.

3 . Connect one terminal of the optical cable to the optical fiber interface of the switches, another terminal is connected to the optical fiber interface of another equipment. It is shown as Figure .4-6.

4 . After the connection completes, check the optical interface LNK/ACT indication light which corresponds to the front panel of the switch. If the indication lights up, it indicates that the connection is effective.

4.5 Cable Layout

The layout of the cable should comply with following conditions:

1 . Check whether the specification, model and quantity of all cables complies with the design of the engineering drawings and the requirement of contract before the cable is laid out.

2 . Check whether the cable is damaged and there are some certificate of factory record and quality assurance before the cable is laid out.

3 . The specification, quantity, direction of routing and placement of all cables to be laid out should comply with the requirement of drawing design, the layout length of each cable should be determined according to the actual position.

4 . There should not be broken wire or tie-in among layout cables.

5 . The user cable should be separated to work out from the power cable.

6 . The cable should be straightly arranged with smoothly, round and even bend in the walkway.

7 . The cable should be straight arranged in the groove and should not be out of the groove to keep the way of other incoming and outgoing cable hole. It should be bounded and fixed in the outgoing groove part or the cable bend.

8 . When cables, power cables and grounding wires are in a casing, they shall not overlap. If they are too long, they shall be tidily coiled and placed in the middle of chutes and they shall not be placed on other cables and wires.

9 . When the tail cable is laid out, the optical cable knot should be prevented and turning should be reduced as much as possible. Furthermore, the turning radius should not be too small. The knot should be tightened moderately and should not be too tightened. When they placed on chutes, they shall be separated from others.

10 . There should be corresponding identification at both ends, and the contents of the identification should be simple and easy to maintain.

Note:

When the tail cable is laid out, the optical cable knot should be prevented and turning should be reduced as much as possible. Furthermore, the turning radius should not be too small. Otherwise, it will cause the serious loss of the link optical signal. Have an effect on the quality of the communication.

Chapter 5 Configuration and Application of Data Port

5.1 Configuration of Data Port

In KIEN2032, a serial data server is built in, which transfers the two serial data into TCP/IP protocol and connects to the Ethernet. The TCP/IP protocol can support both the connection-based TCP protocol and the connectionless UDP protocol. Hence, any computer on the network can control the serial port equipment and share the information of the serial port equipment.

Users can log on the console network management of the serial data server via super terminal by the serial port 1 of the KIEN2032 or in the Ethernet interface Telnet way, even log on the WEB network management of the serial data server in the Ethernet interface WEB way. Above three network management methods can set the IP address and the operation method of the KIEN2032 serial data server. Before using the equipment, the data interface of the KIEN2032 should obtain unique IP address to implement remote setting and the normal operation. The IP address of the KIEN2032 is set to 192.168.0.123 and the subnet mask is 255.0.0.0 as a factory default.

5.1.1 Logon Console Network Management

1. Logon Serial Port Console Network Management

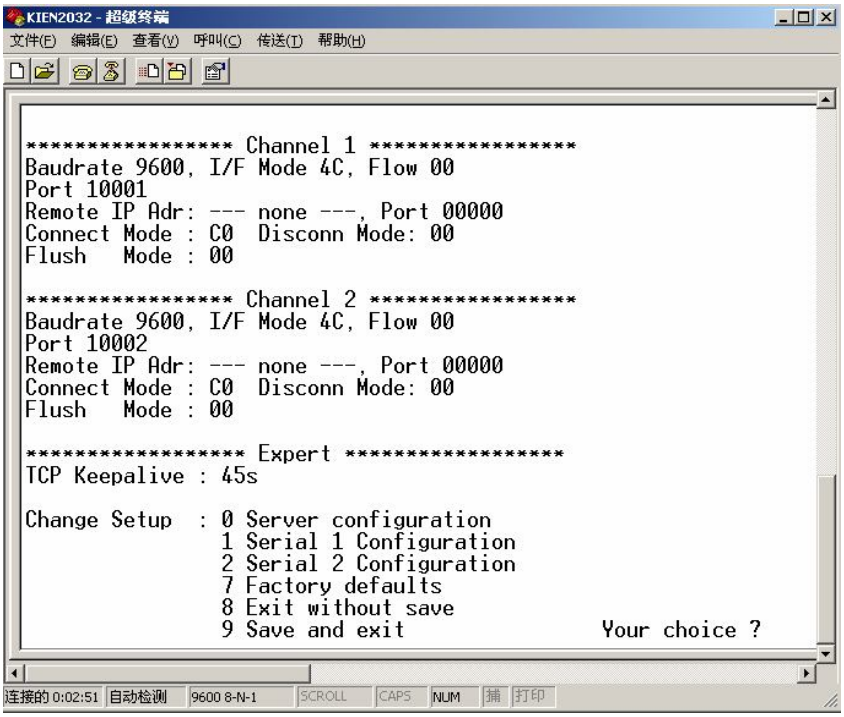

Figure .5-1 Logon Serial Port Console

Use serial port wire to connect the serial port of one control computer to the serial port1 of the KIEN2032, open the super terminal program of the output which is set to 9600, 8, none, 1 and without traffic control. Continuously enter 3 lowercase x characters to the super terminal window when it is powered on the KIEN2032, until the super terminal window displays the setting menu. It is shown as Figure .5-1.

2. Logon Telnet Console Network Management

Use cross-over cable or straight-through cable to connect any Ethernet RJ4 port of the KIEN2032 to the network or the user computer network interface card firstly. Please type telnet 192.168.0.123 9999 into the Run window of Windows or the MS-SOS command line prompt. The TELNET window will display the setting menu. The contents of menu should be completely consistent with the logon serial port console network management. It is shown as Figure .5-2.

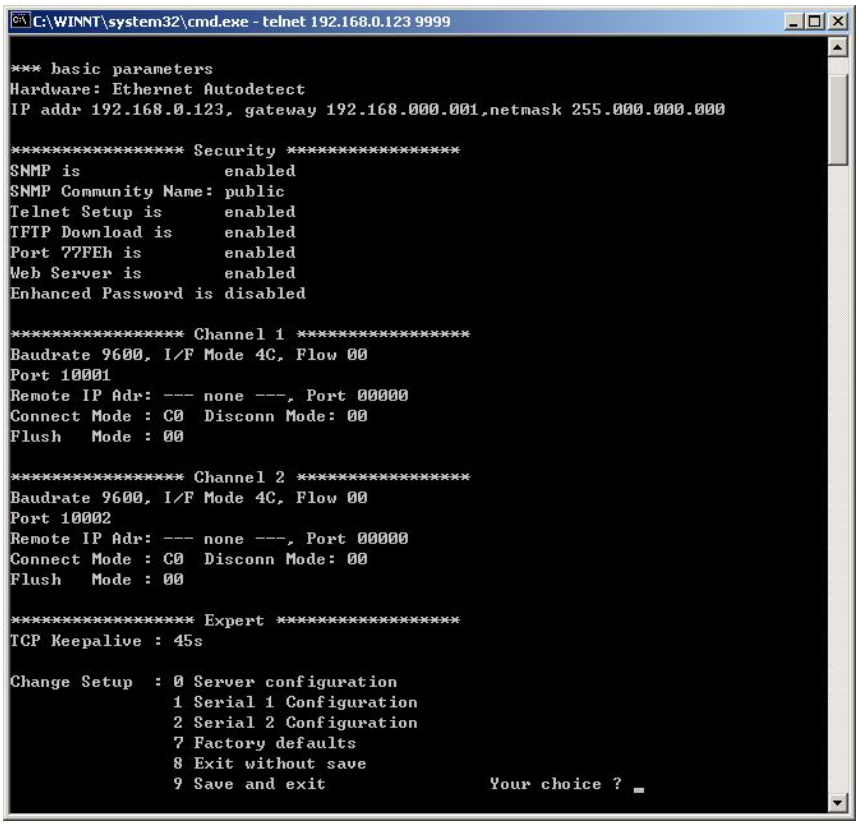

Figure .5-2 Logon Telnet Console

5.1.2 Console Network Management

The console network management can provide 8 menu items: 0 Server setting; 1 Serial port 1 setting; 2 Serial port 2 setting; 5 Advance setting; 6 Security setting; 7 Factory setting; 8 Exit without saving; 9 Save and exit. Following will introduce the console network management menu item by item.

1. Server Setting

It will set the parameter of the KIEN2032 serial data server when 0 is selected, such as IP address, subnet mask and gateway. Note that the IP address should be unique in the LAN. The subnet mask setting is defined by adopting the bits of the actual binary mask 0, such as the 255.255.255.0 is set to 8. If it is set to 0, it will adopt corresponding subnet mask according to the type of the IP address, the subnet mask corresponding relationship is shown as follows.

Table5-1 Corresponding Table of Subnet Mask

Subnet Mask	KIEN2032 Serial Data Server Setting
255.255.255.252	2
255.255.255.248	3
255.255.255.240	4
255.255.255.224	5
255.255.255.192	6
255.255.255.128	7
255.255.255.0	8
255.255.254.0	9
255.255.252.0	10
255.255.248.0	11
..	
..	
255.128.0.0	23
255.0.0.0	24

This item should also contain the Telnet password setting and provide the telnet port 9999 with password protection. This password is up to 4 bit. When there is password, it will give the password input prompt before using the Telnet firstly.

2 . Serial Port Setting

When 1 or 2 is selected, it will set the parameters of serial part1 or serial part2 for the KIEN2032.

Baud rate: the effective baud rate is 300,600, 1200, 2400, 4800, 9600 (by default), 19200, 38400, 57600 or 115200. The equipment will remind promptly when the input error occurs.

Interface Mode: It is the two bytes of hexadecimal which is used to define the type of interface , word length, check bit and stop bit of the for the serial port. The corresponding binary is defined as shown in following table:

Table5-2 Binary Corresponding Table of Interface Mode

Option	Bit7	6	5	4	3	2	1	0
RS-232C							0	0
RS-422/485							0	1
RS-485 2-wire							1	1
7 bit of word length					1	0		
8 bit of word length					1	1		
Without check			0	0				
Odd check			0	1				
Even check			1	1				
1 stop bit	0	1						
2 stop bit	1	1						

Where, the type of common value is shown as follows:

Table5-3 Corresponding Table of Common Interface Mode

Type	Binary	Hexadecimal
RS232C, 8 bit, without check, 1 bit of stop bit (by default)	01001100	4C
RS232C, 7 bit, event check, 1 bit of stop bit	01111000	78
RS485 2-wire, 8 bit, without check, 1 bit of stop bit	01001111	4F
RS232C, 8 bit, odd check, 2 bit of stop bit	11011101	DD

Flow Control: it is the two hexadecimal which is used to set necessary communication handshake method. In general, if the data block is less than 1K or the rate is less than 9600, it is not necessary to adopt the flow control. The concrete value is defined as following table.

Table 5-4 Value Corresponding Table of Traffic Control

Type	Hexadecimal
No Flow Control (by default)	00
XON/XOFF Software Control	01
RTS/CTS Hardware Control	02
XON/XOFF Control, but the control character is also transmitted to the host.	05

Port Number: The local port number of this serial port. For the TCP protocol, it is the port number intercepted locally. For the UPD protocol, it is the local port number which is binding. Typically value scope is 1024 - 65535.

Note:

14000~14009 Reserve for some serial port to redirection the software.

9999 Reserve for the use when TELNET logon.

30718 Reserve for parameters setting.

Connection Method: it is the two hexadecimal which is used to set the operation method of the network connection, define the operation method of TCP Server, TCP Client or UDP protocol. The corresponding binary definition is shown as following table:

Table5-5 Binary Value Corresponding Table of Connection Method

Category	Type	7	6	5	4	3	2	1	0
TCP Server	Don’t accept connection.	0	0	0	0				
	Controlled by DCD.	0	1	0	0				
	Accept the connection unconditionally.	1	1	0	0				
TCP Client	Don’t accept actively.					0	0	0	0

	Any character connection.					0	0	0	1
	Controlled by DCD.					0	0	1	0
	Manual connection.					0	1	0	0
	Power on automatic connection.					0	1	0	1
UDP Protocol	UDP					1	1	0	0
Modem Simulation Mode	Redisplay				1	0	1	1	0
	Don’t redisplay				0	0	1	1	0

Manual connection: When the connection method is set to manual connection, the KIEN2032 can accept the command sent from the serial port and execute the connection request to the remote host. The command consists of uppercase C + Remote IP address +/ port number.

For instance: Suppose that the IP address of one terminal of the KIEN2032 is 192.168.0.123 with port number 10001, then C192.168.0.1/10002 will attempt to set up the connection whose IP address is 192.168.0.1 and port number is 10002.

Automatic Connection: It will launch the connection automatically after the KIEN2032 powers on according to predefined remote IP address and port number.

Type of Data Packet: When the datagram type is prompted, 01 is entered to represent the UDP protocol.

Modem Simulation Mode: When the connection method of the KIEN2032 is set to the modem simulation mode, the KIEN2032 is equivalent to a modem for the equipment which connects to other serial ports, KIEN2032 can receive the AT command request from the serial port. Hence, it can use Ethernet to replace previous dial connection and need not to modify any dial-based management software. When the KIEN2032 is set to the modem simulation mode and the serial port is in the idle status, the KIEN2032 can still be taken as the server to

receive the connection request from the remote client.

Redisplay: it means the redisplay of the AT command and response.

Remote IP Address: This predefined IP address will be used when the automatic connection method is used.

Remote Port Number: Attempt to set up the remote port number for the connection. When the KIEN2032 is used as the telnet UNIX system host for the terminal, the port number should be set to 23.

Disconnection Mode：It is the two hexadecimal which is used to set the disconnection mode of the serial port connection. The definition of corresponding binary is shown as following table:

Table5-6 Binary Value Corresponding Table of Disconnection Method

Type	7	6	5	4	3	2	1	0
Terminated by DCD □	1							
DCD neglected □	0							
Telnet method □		1						
Serial port password protection □				1				
Forced termination □					0			
Forced termination is prohibited					1			
Close the LED indication light when there is the connection □.								1
Closed by EOT （^D） □			1					

□ DCD is outputted by the DCE equipment.

□ KIEN2032 will send the type of the terminal when it requests the connection.

□ The password requires to be provided when remote host request the connection.

□ Whether the confirmation signal for termination of opposite side, the TCP connection will be terminated compulsively.

□ If the TCP is set up, LED indication light will be closed but not flashed.

□ When x40h is monitored from the data of the serial port, the connection

will be closed. (Only when both the Telnet method and the EOT method are set at the same time, this function acts.)

Clear Buffer Mode: It is the two hexadecimal which is used to set the clear method of the buffering area data for the serial port and network interface when the connection is set up or terminated. The corresponding binary is defined as shown in following table:

Table5-7 Binary Value Corresponding Table of Clear Buffer Mode

Type	7	6	5	4	3	2	1	0
Receiving Buffer Area (From serial port to network interface)								
Clear when the serial port launches the connection.				1				
Clear when the network interface launches the connection.			1					
Clear when the connection terminated.		1						
Receiving Buffer Area (From network interface to serial port)								
Clear when the network interface launches the connection.								1
Clear when the serial port launches the connection.							1	
Clear when the connection terminated.						1		
Packet Algorithm								
Packet Algorithm is allowed.	1							

Data Packet Control: It is the two bytes of hexadecimal which is used to control the data packet when the clear buffer method setting is allowed to the packet algorithm. The definition of corresponding binary is shown as following table:

Table5-8 Binary Value Corresponding Table of Data Packet Control

Type	Type	7	6	5	4	3	2	1	0
Waiting the serial port idle time	Wait 12ms to send							0	0
	Wait 52ms to send							0	1
	Wait 250ms to send							1	0
	Wait 5ms to send							1	1
Send character	None					0	0		
	1					0	1		
	2					1	0		
Followed character	Double byte				1				
	Single byte			1					

Disconnect time: The format is mm：ss. When the setting is 00:00, it indicates that the idle time is inifitely large.

Sending Character: Two characters can be set to immediate sending characters. When any one is received, this character together with the data the serial port buffered will be packaged to send. In this way, it can reduce the response time of some protocol packet or partition the whole serial port protocol into several network data packet. When one character is set to 00, the sending character function will be shielded. 2 sending characters can also be taken as the two bytes sequence. Namely, it will immediately send only when the two bytes is received, this function will be valid when the sending character is two bytes in the data packet control.

Following Character: The character followed the sent characters, such as single check or CRC check. If the following character is set, it will wait for one or two following characters after receiving the character and then send the data packet the serial port buffered to the network.

Terminal Name: If the telnet connection method is set in the termination connection mode, the type of terminal is set in here, namely the name of terminal.

Port Password: If the port password protection is set in the termination connection mode, the password is entered from here and the longest one is 16 bit.

3. Factory Setting

All parameters will be restored to the factory default value if 7 is selected. However, the IP address, subnet mask and the gateway will be kept constantly.

4. Exit without saving

Previous modification will be invalid and the KIEN2032 will restart.

5. Save and Exit

Save previous parameters modification, exit and restart the KIEN2032.

5.1.3 WEB Network Management

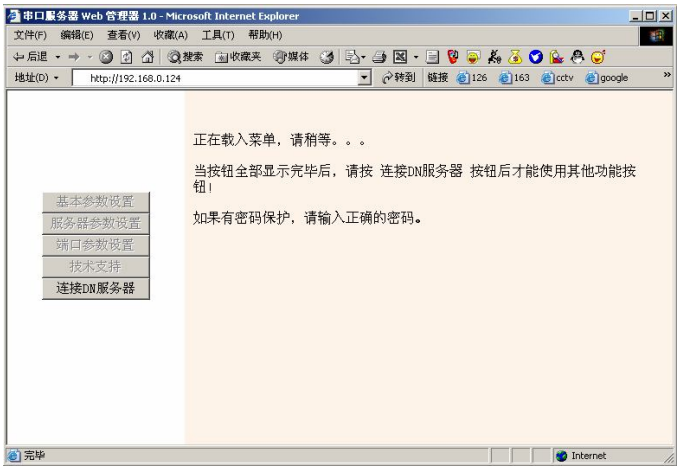

Figure .5-7 Logon WEB Network Management

If the WEB method is expected to use, modify the IP address of the computer which is used to set to be within the same network segment with the KIEN2032.

Use ping command in the computer after the KIEN2032 is connected to the network correctly such as ping 192.168.0.123

After the response is confirmed correctly, launch the IE browser and enter 192.168.0.123 into the address column, the interface as is shown in Figure .5-7 is obtained. Click “Connect DN Server” button to enter the main menu of the KIEN2032 serial data server WEB network management as shown in Figure .5-8.

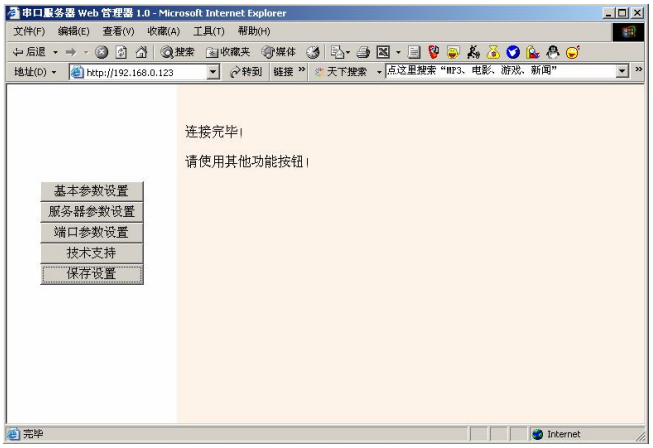

Figure .5-8 WEB Network Management Main Menu

1. Basic Parameter Setting

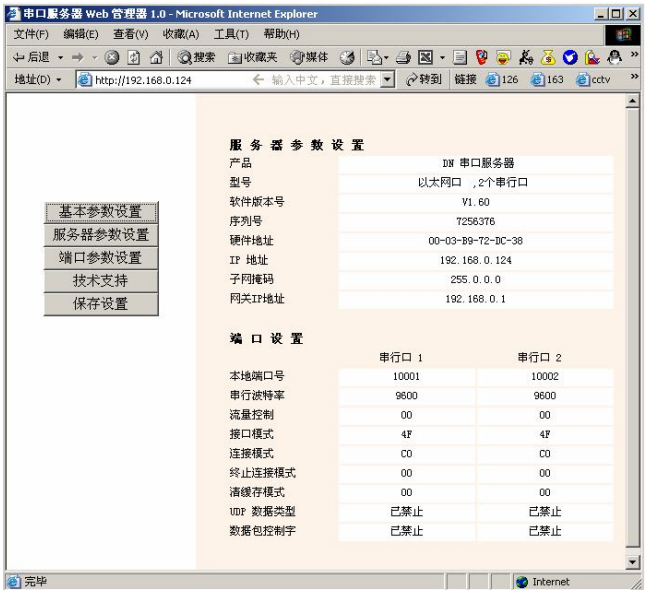

Figure .5-9 Basic Parameter Query

This page indicates the basic information of KIEN2032 such as IP address, subnet mask, gateway address, MAC address and the parameters of two serial ports. The parameters can not be set at this page.

2. Server Parameters Setting

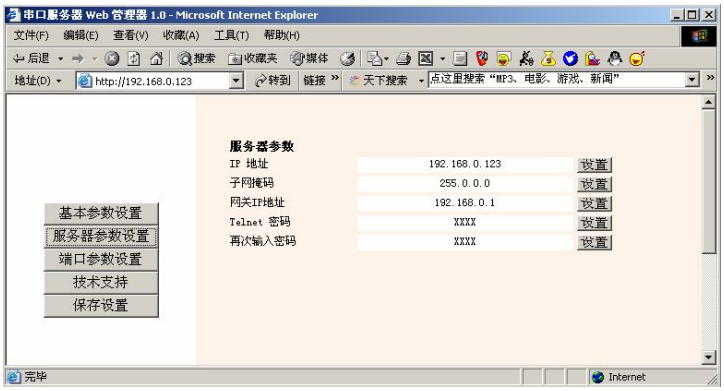

Figure .5-10 Basic Parameter Setting

This page sets the IP address, subnet mask, gateway IP address and TELNET logon password of KIEN2032.

3. Ports Parameters Setting

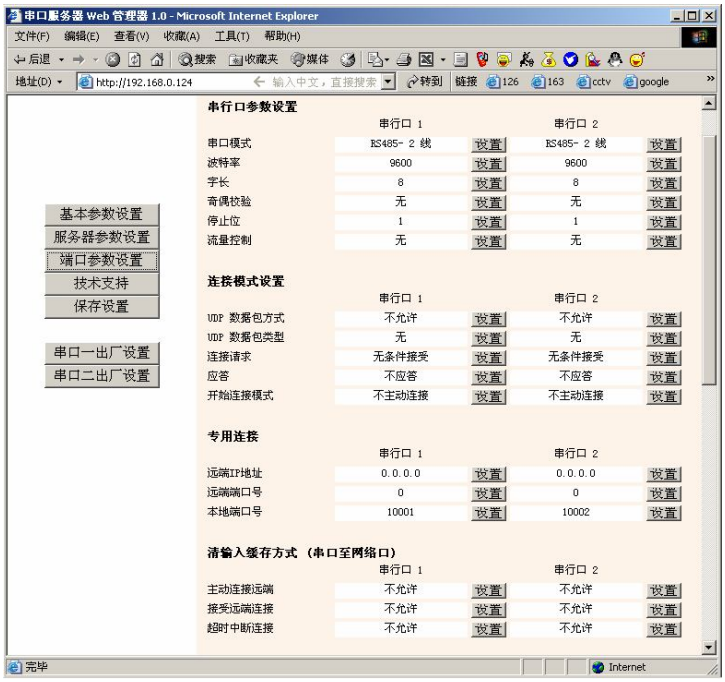

Figure .5-11 Serial Ports Parameter Setting

This page can set various parameters of serial port 1 and serial port 2. For the meanings of various items, refer to the introduction of the console network management.

This page can also restore the individual setting of serial port 1 and serial port 2 to the factory default setting.

5.2 Application of Data Ports

5.2.1 As TCP Server

The KIEN2032 takes the TCP server method to implement the transfer and transmission from the serial port data to the network ports. After the KIEN2032 in network is configured with unique IP address and corresponding port number, the KIEN2032 starts to intercept. If there is some host which launches the connection in network, the data ports of KIEN2032 will accept the connection request and send the data received from the network port to the serial port, and then send the data received from the serial port to the network port by the TCP/IP protocol packet. The KIEN2032 will not resolve and change any user's data packet and provide fully transparent data channel. The setting is shown as follows:

Port number: (10001)
Connection Method: (C0)
Remote IP Address: (000). (000). (000). (000)
Remote Port Number: (00000)

The implement method for the communication between two network hosts and KIEN2032 serial port:

1. Use Winsock Programming

   The user who is familiar with the network programming can use the Winsock programming and launches the connection to KIEN2032. After the connection is set up successfully, it can read/write the data transparently.

2. Use Virtual Serial Port (Serial Port Redirection) Software

   It can implement virtual serial ports up to 255 in the computer by installing the Serial IP virtual serial port software of our company, the data that accesses these virtual serial ports will be sent to KIEN2032 from the network. The data the KIEN2032 serial port received will also be transmitted to the virtual serial port from the network. There is no difference between the operation for user to the virtual serial port and the actual serial port operation. User can not modify

any serial port-based application software and use the serial port equipment from the network directly.

The port number must be one from 14001 to 14009 when the serial port redirection is used. The IP address of the serial port redirection software is set to that of KIEN2032, the port number is set to 3001 (14001-11000 = 3001), the porting setting item can not select Raw Mode.

5.2.2 As TCP Client

In the optical fiber network of KIEN2032, if one terminal is set to the TCP server way, another terminal is set to the TCP Client way. The TCP Client powers on to connect the server automatically, and implement the point to point connection between two serial data ports. If the IP address of server is 192.168.0.100 and the port number is 10002. The setting is shown as follows:

Port number: (10001)
Connection Method: (C5)
Remote IP Address: (000). (000). (000). (000)
Remote Port Number: (00000)

5.2.3 UDP Method

In UDP mode, the serial port receives the network data and retransmits it to the preset port number with predefined IP address constantly, but not sets up the connection in advance. If the preset IP address is set to the broadcast address of the network segment, it will implement the point to point communication of the serial port.

Following setting can implement the point to multi-point communication from point A to point B or C.

Equipment A	Equipment B	Equipment C
IP Address: 192.168.0.123 Subnet Mask: 8 Gateway: None Serial Port 1: Baud Rate: 9600 Interface Mode: 4C Flow Control: 00 Port number: 10001 Connection Method: CC Type of Data Packet: 01 Remote IP Address: 192.168.0.255 Remote Port Number: 10002	IP Address: 192.168.0.124 Subnet Mask: 8 Gateway: None Serial Port 1: Baud Rate: 9600 Interface Mode: 4C Flow Control: 00 Port number: 10002 Connection Method: CC Type of Data Packet: 01 Remote IP Address: 192.168.0.123 Remote Port Number: 10001	IP Address: 192.168.0.125 Subnet Mask: 8 Gateway: None Serial Port 1: Baud Rate: 9600 Interface Mode: 4C Flow Control: 00 Port number: 10002 Connection Method: CC Type of Data Packet: 01 Remote IP Address: 192.168.0.123 Remote Port Number: 10001

Chapter 6 Testing Methods

6.1 Self Testing

When the power is connected, all service indicators on the front panel will flash one time, which means normal running of these ports. 。At the same time, the ARLAM indication light will be off after blinking for several times, which indicates that the self testing of the data server is normal. After that, corresponding POW will light up constantly, the DATA1 and DATA2 will light up for a long time. RUN light is set to on/flash/off according to the setting of the properties switch.

6.2 Testing of Ethernet Ports

As showed in the Figure 6-1, the KIEN2032 is powered on to connect any two Ethernet ports with two testing computers with direct link network wires. Send PING command each other. If the hardware of the tested Ethernet ports runs normally, any one computer is able to ping the other correctly without package loss. Also, yellow indicators of corresponding port are on when network cards of computers are in 100M status or off when in 10M status, and green indicators of corresponding ports are blinking. It indicates that the hardware of tested two Ethernet Ports work normally. The same method is used to test all other Ethernet ports (For detailed operation of the PING command, refer to the following examples.).

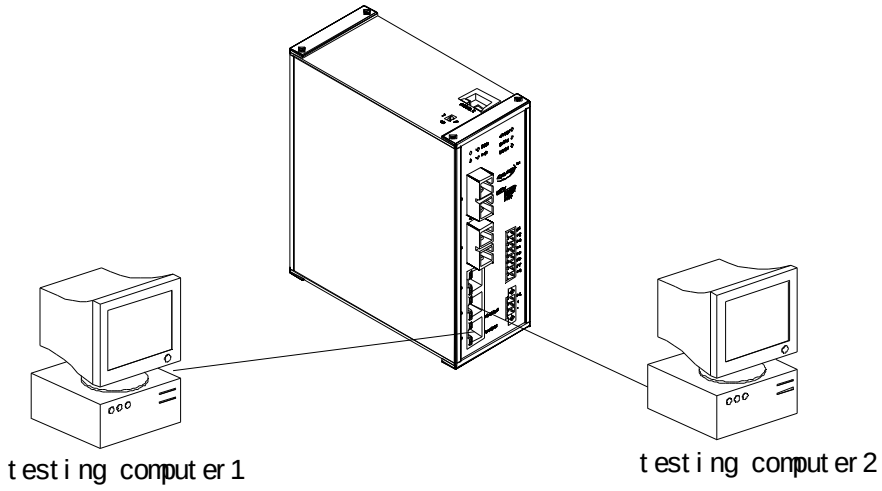

Figure 6-1 Testing of Electric Ports

6.3 Testing of Fiber Ports

Use two KIEN2032 switches to build an optical fiber link network as is shown in the Figure .6-2. Connect any one fiber port of a switch with a testing computer with direct link network wires. Send the PING command each other. If the hardware of the tested fiber ports runs normally, any one computer is able to PING the other without package loss. At the same time, the LINK/ACT indicator of corresponding fiber port is on. It indicates that the hardware of tested two fiber ports work normally. The same method is used to test another pair of fiber ports (For detailed operation of the PING command, refer to the following examples.).

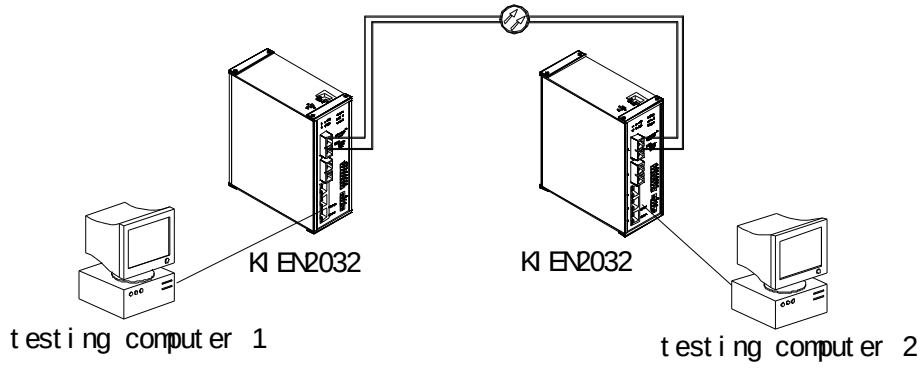

Figure 6-2 Testing of Optical Ports

An Example of the PING Command:

The IP address of the testing computer 1 is 192.168.100.10 and the 2 is 192.168.100.11.On the testing computer 1, run “cmd” in the WIN2000 operating system or “command” in the WIN98/95 operating system from “Run” in the “Start” menu. Send “ping 192.168.100.11 –l 1000 –t”. (-1 means byte number of the sent data package; -t means continuously sending data). On the testing computer 2, run “cmd” in the WIN2000 operating system or “command” in the WIN98/95 operating system from “Run” in the “Start” menu. Send “ping 192.168.100.10 –l 1000 –t”. If switches run normally, the testing computer 1 returns “Reply from 192.168.100.11 : bytes=1000 time<10ms TTL=128” and the 2 returns “Reply from 192.168.100.10 : bytes=1000 time<10ms TTL=128”, and the counted package loss rate is zero checked by the CTL+C command ten minutes after running.

6.4 Data Ports Test

The KIEN2032 presents two channels of data and the interface of one may be RS232 or RS485. However, only one interface outputs at one time. The interface of the second one presents both RS232 and RS485 output. However, the RS232 and RS485 of the same channel can not be used at the same time. The RS232 interface for the first channel of data for KIEN2032 is connected to the COM1 port of the test computer2 or the RS485 interface of the first channel of data is connected to the COM2 port of the test computer2 by the RS232/RS485 convertor. The RS232 interface for the second channel of data for KIEN2032 is connected to the COM2 port of the test computer2 or the RS485 interface of the second channel of data is connected to the COM2 port of the test computer2 by the RS232/RS485 convertor. Any electric ports of the equipment are connected to the network ports of the test computer1 by the direct link network wire as shown in Figure .4-3.

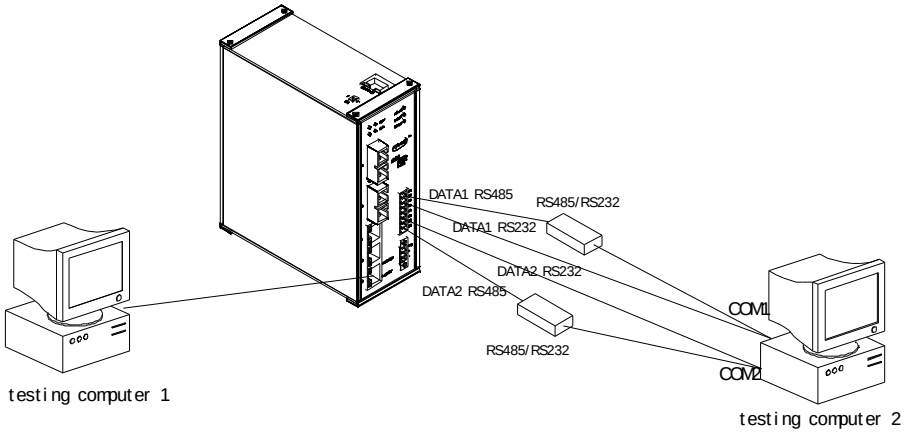

Figure 6-3 Testing of Data Ports

Test Data 1:

Run the super terminal on the test computer 1, select TCP/IP (Winsock) as “use when connection", 192.168.0.123 is entered into the “Host Address”, 10001 is entered into “Port Number”. Click “OK”. Click the call button in toolbar after the super terminal window is opened. Run the super terminal on the test computer2, the “Use when connection" selects the COM1. The window at the port setting is set to 9600, 8, none, 1 and none. Click “OK”. Click the call button in toolbar after the super terminal window is opened. At this time, any character entered from the super terminal window of the test computer 1 should be displayed in the super terminal window of the

test computer 2. In this way, any character entered from the super terminal window of the test computer 2 should be displayed in the super terminal window of the test computer 1. The test of data 1 is normal.

Test Data 2:

Run the super terminal on the test computer 1, select TCP/IP (Winsock) as “use when connection", 192.168.0.123 is entered into the “Host Address”, 10002 is entered into “Port Number”. Click “OK”. Click the call button in toolbar after the super terminal window is opened. Run the super terminal on the test computer 2, the “Use when connection" selects the COM2. The window at the port setting is set to 9600, 8, none, 1 and none. Click “OK”. Click the call button in toolbar after the super terminal window is opened. At this time, any character entered from the super terminal window of the test computer 1 should be displayed in the super terminal window of the test computer 2. In this way, any character entered from the super terminal window of the test computer 2 should be displayed in the super terminal window of the test computer 1. The test of data 2 is normal.

Chapter 7 Networking Modes and System Configuration

7.1 Networking Modes

Each of KIEN2032 industrial Ethernet switches provides three 10Base-T/100Base-TX Ethernet RJ45 ports. Each port can be directly connected with a end device or another industrial Ethernet switch/hub before the terminal for share link. The KIEN2032 industrial Ethernet switch also presents two pair of 100Base-FX single mode or multi-mode optical fiber interface with uplink redundancy. It can take advantage of the uplink redundant optical fiber interface to form the optical fiber redundant ring network, the recovery time for the ring network redundancy is less than 300ms when the system failure occurs. It can be broadly applied to power plant, transportation, energy, water processing and large-sized plant automatic control field and office dispatching field.

The most typical networking mode of KIEN2032 is the redundant ring network. The KIEN2032 builds the optical fiber redundant ring network, as showed in the Figure ure 7-1. One switch is set as the central office device and others are set as remote. In case of breaking of the optical fibers, communication can be recovered within 300ms.

Note:

In networking of the redundant ring network of KIEN2032, we recommend to connect the port 4 with the port 8. In other words, the port 4 of a unit connects with the port 8 of another unit. It is shown as following diagram.

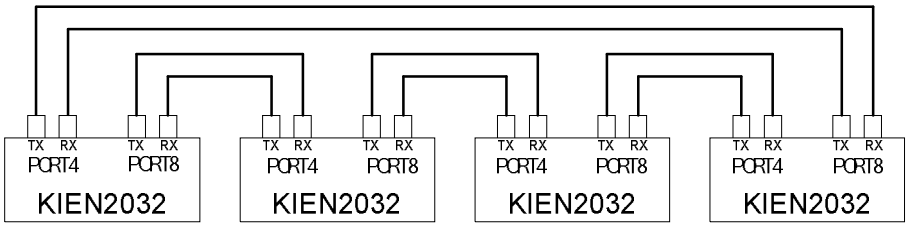

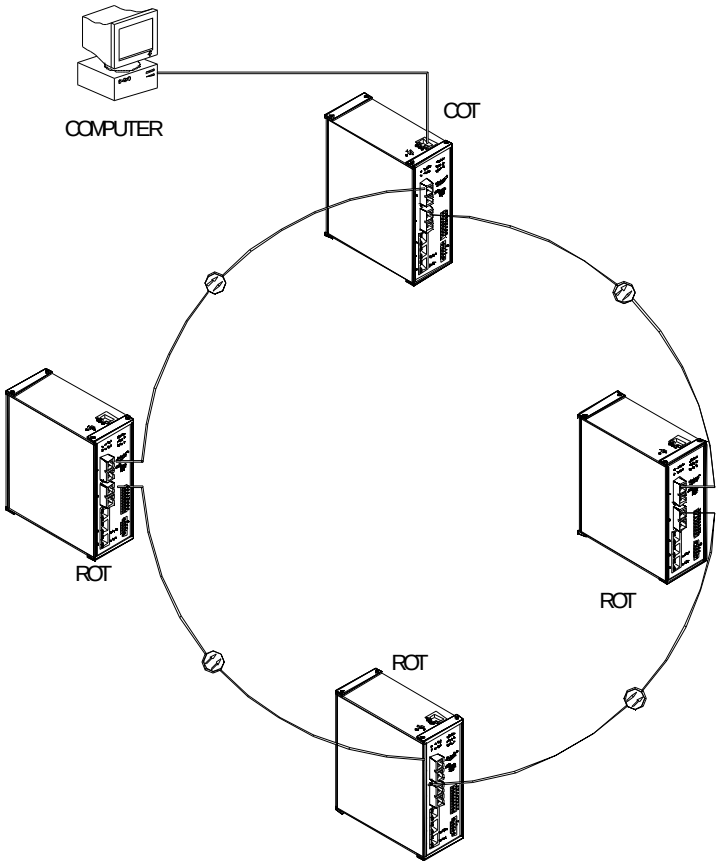

Figure 7-1 Optical Fiber Redundant Ring network of KIEN2032

7.2 System Configuration

The KIEN2032 industrial Ethernet switches adopt integrated structure with the standard configuration of 3 10Base-T/100Base-TX Ethernet RJ-45 ports and 2 redundant 100Base-FX optical fiber ports are configured fixedly. The optical fiber interface can be customized to single mode/multi-mode. The specification of the power supply is fixed DC24V. The data interface can provide 3 data interfaces. Where, the fist one can be outputted to the RS232 or RS485 interface, the second data can be outputted to fixed RS232 interface and RS 485 interface. Their specific configuration and models are showed in the Table 7-1.

Table 7-1 Configuration Table for KIEN2032

Switch Model	Switch Description
KIEN2032-2S（A）	2 uplink redundant 100Base-FX single mode optical fiber interface and 2 RS232s and 1 RS485 data interface
KIEN2032-2S（B）	2 uplink redundant 100Base-FX single mode optical fiber interface, 1 RS232 and 2 RS485 data interfaces
KIEN2032-2M（A）	2 uplink redundant 100Base-FX multi-mode optical fiber interfaces, 2 RS232s and 1 RS485 data interface
KIEN2032-2M（B）	2 uplink redundant 100Base-FX multi-mode optical fiber interfaces, 1 RS232 and 2 RS485 data interfaces

Appendix A Twisted -pair and Pin Distribution

For the 10Base-T/100Base-TX, the twisted-pair should present two pair of wires. Each pair is differentiated by different colors. For instance, the one is green and the other is the green and white interleaved. There should be the RJ-45 connector at both sides of cables.

Warning:

Don't plug the telephone jacket into any one RJ-45 port. Only the twisted-pair which complies with the FCC standard is used. Furthermore, both sides present the RJ-45 connectors.

Figure .A-1 illustrates how to number the RJ-45 connector, please confirm the consistence of the direction when it is inserted.

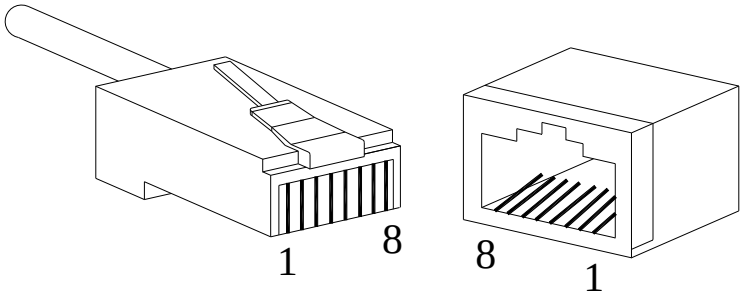

Figure .A-1 RJ-45 Connector

Pin distribution of 10Base-T/100Base-TX

RJ-45 connection adopts the Unshielded Twisted Paired (UTP) or the Shielded Twisted Pair (STP): the 10Mbps connection adopts the 100ohm of Cat3, Cat4 and Cat5, while the 100Mbps connection adopts the 100ohm of Cat5. Furthermore, keep in mind that the connection length of any twisted-pair should no be more than 100m.

The RJ-45 port supports the automatic MDI/MDI-X operation, and can use the direct connection wire to connect the PC or server, or connect other switches or hubs. In the direct connection wire, pin 1, 2, 3 and 6 are at the same end of the

cable and are connected to the pin 1, 2, 3 and 6 at the other end of the connection cable. If it is necessary to connect to the switches or hubs with MDI-X port, it needs to use the crossover wire. For the concrete condition on the 10Base-T/100Base-TX pin assignment, refer to table A-1.

Table A-1 10Base-T/100Base-TX Pin Assignment

Pin	MDI-X signal name	MDI signal name
1	Receiving data + (RD+)	Output data + (TD+)
2	Receiving data - (RD-)	Output data - (TD-)
3	Output data + (TD+)	Receiving data + (RD+)
6	Output data - (TD-)	Receiving data - (RD-)
4 , 5 , 7 , 8	unused	unused

Note: “+” and “-” represent the polarity of cable.

Definition for Direction Connection Cable from RJ45 (8-pin) to RJ45 (8-pin)

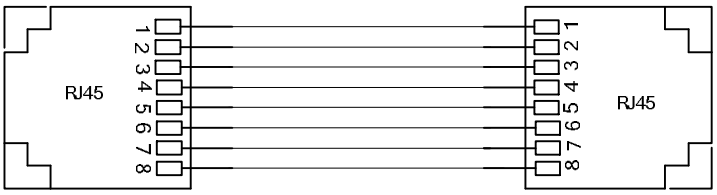

The connection sequence is in turn: Orange-white, Orange, Green-white, Blue, Blue-white, Green, Brown-white and Brown

Figure .A-2 Order of Direct Connection Cable

Definition for Cross Connection Cable from RJ45 (8-pin) to RJ45 (8-pin)

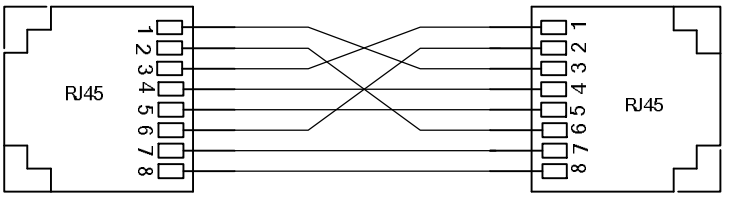

The connection sequence is in turn: Orange-white, Orange, Green-white, Blue, Blue-white, Green, Brown-white and Brown
Green-white, Green, Orange-white, Blue, Blue-white, Orange, Brown-white and Brown

Figure .A-3 Order of Cross Connection Cable

Appendix B Type and Specificat ion of Cable

The type and specification of cable is shown as Figure .B-1.

Table B-1 Type and Specification of Cable

Cable	Type	Maximum Length	Connect or
10Base-T	Cat3, Cat4 and Cat5, 100ohm UTP	100m (328 foot)	RJ-45
100Base-TX	Cat5, 100ohm UTP	100m (328 foot)	RJ-45
100Base-FX	50/125 or62.5/125μm core multi-mode optical fiber cable (MMF)	2km (1.24 miles)	SC/FC
100Base-FX	9/125μm core single mode optical fiber cable (SMF)	20km (12.43 miles)	SC/FC

Appendix C Glossary

Terminology	Explanation
10Base-T	Twisted-pair standard of Cat3, Cat4 and Cat5 in IEEE specification for 10Mbps Ethernet
100Base-TX	Twisted-pair standard of Cat5 or above in IEEE specification for 100Mbps Fast Ethernet
100Base-FX	Fast Ethernet which uses one pair of multi-mode or single mode optical fiber to transmit.
Adaptive	A characteristic that is automatically configured to adaptive mode for the speed, duplex and traffic control port.
Bandwidth	The information capacity that the channel can transmit. For instance, the bandwidth of the Fast Ethernet is 100Mbps（bit per second）.
Baud Rate	It expresses the signaling rate which is defined as the change times of the status for the electric or optical transmission medium within 1 second.
Bridge	One of network equipments which run on the layer2 in the OSI layer7 model, and it can be connected to the LAN or network segment which uses the same protocol. It presents the automatic network address learning and network configuration function.
Traffic Control	It is a congestion control mechanism. The network equipment sends the data to the equipment which has overloaded and causes the port to congest. The traffic control can prevent the data packet from loss and avoid the congestion for the port.
VLAN	It is the Virtual Local Area Network, which means that it takes the network management software to establish the point to point logic network which can cross different network segment and various network on the switching LAN.
Broadcast	One data packet is sent to all equipments on the network.
Broadcast storm	Restless forward broadcast frame or multicast frame on bridge caused by the bridge ring.
Full Duplex	Use switches to set up the point to point connection among nodes in the LAN and allow them to receive and send data packet at the same time.
Half Duplex	The communication for two nodes can only move toward one direction at the same time, but can not move toward both directions.
MDI	It is the Medium Dependent Interface, in which, one Ethernet port is taken as the receiving terminal to connect to the port of other equipment.
MDI-X	Medium Dependent Interface Cross-over

Publisher: **KYLAND Telecom Technology CO., LTD**

Address: P.O.Box 100096, 085, Beijing, China

Website: http://www.kyland.cn

Postcode: 100096

Tel: （+86 10）82900770

Fax: （+86 10）82900780

E-mail：marketing@kyland.com.cn